KALMIX

SCOUT PRO

Interface Specification

USB Type-C Pinout · Connection Architecture · Integration Guide

The SCOUT PRO connects to host devices via an industrial-grade **USB Type-C 12-Pin plug** integrated at the end of a durable 3-meter cable. While it features a modern Type-C form factor for reversible, secure connections, the data transmission utilizes the robust USB 2.0 protocol to ensure maximum compatibility across all computing platforms.

Pin Definition

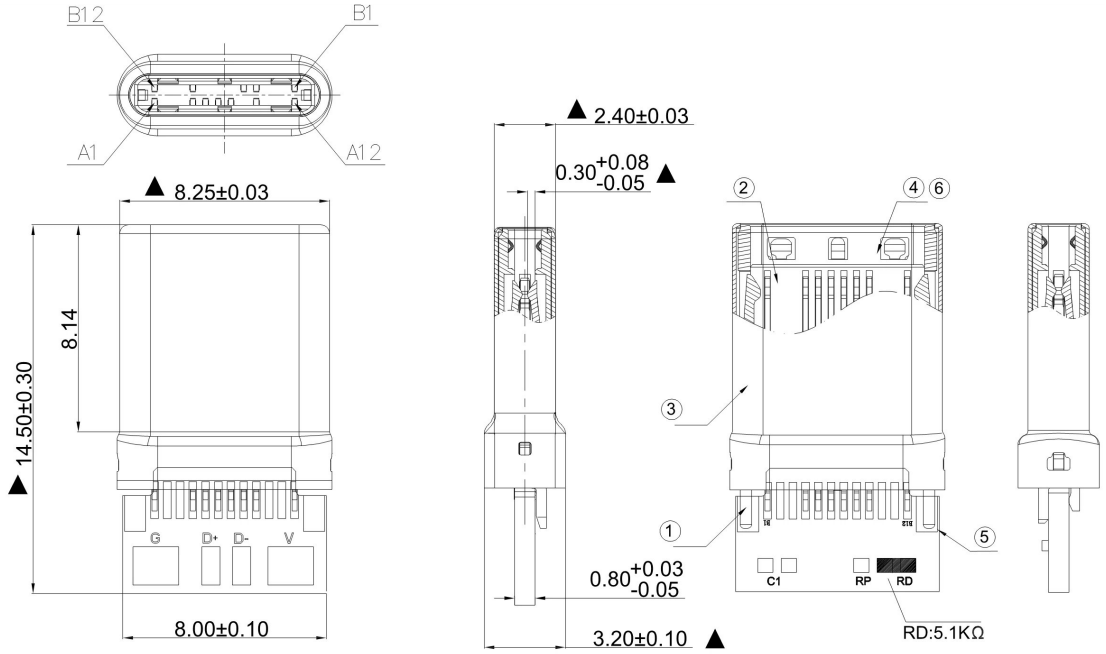

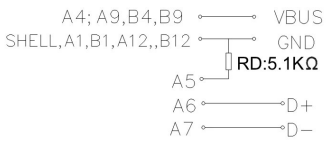

For hardware integrators designing custom carrier boards or modifying the cable for specific robotic enclosures, the Type-C plug is wired according to the standard USB 2.0 mapping.

Pin (Side A)	Pin (Side B)	Signal Name	Description
A1, A12	B1, B12	**GND**	Ground reference.

Pin (Side A)	Pin (Side B)	Signal Name	Description
A4, A9	B4, B9	VBUS	Bus power supply (5V DC Input).
A5	—	CC1	Configuration Channel 1.
—	B5	CC2	Configuration Channel 2.
A6	B6	D+	USB Data Positive.
A7	B7	D–	USB Data Negative.

Hardware Integration Note
The Type-C connector is strictly wired for standard **USB 2.0** communication. Advanced Type-C features such as Power Delivery (PD) or Alternate Modes are neither required nor supported. If you are designing a custom carrier board, simply treat the SCOUT PRO as a standard 5V UFP (Upstream Facing Port) USB 2.0 device.

Connection Logic & Architecture

To achieve true plug-and-play simplicity without requiring native UART integration on the host side, the SCOUT PRO utilizes an internal translation architecture and a standardized Type-C power handshake:

• **GNSS Engine Output:** The internal Airoha AG3335 module outputs standard NMEA positioning data via its native **UART** (TX/RX) interface.

• **USB Bridge Conversion:** An industrial-grade **CH340N USB-to-UART bridge IC** instantly converts these UART signals into standard USB 2.0 data packets.
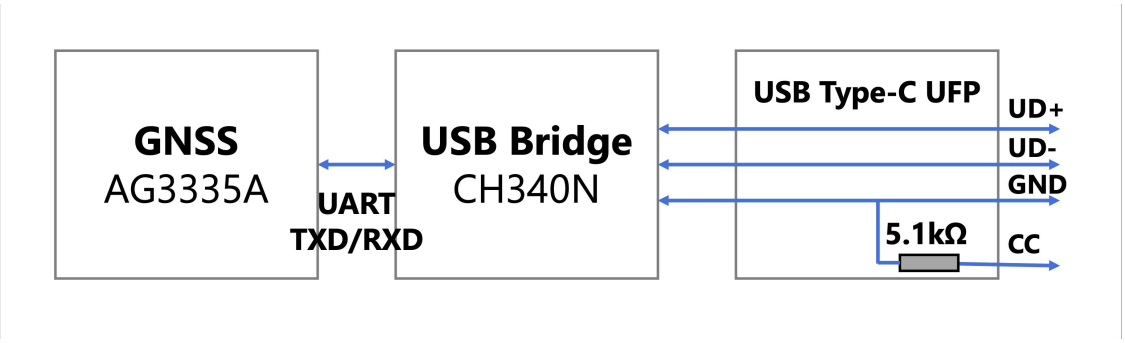
• **Power Handshake & Enumeration:** The device operates as a standard Upstream Facing Port (UFP). When connected, the host detects the internal **5.1kΩ pull-down resistors** on the CC1/CC2 pins and automatically provides the required 5V VBUS power. Simultaneously, the D+/D– data lines communicate with the host, causing the SCOUT PRO to enumerate instantly as a **Virtual COM Port (VCP)** on your PC, Raspberry Pi, or Jetson Nano.